FIGARO

Version change of FIC93619A to "FIC02667"

Contents

January 2003
Figaro Engineering, Inc.

Outline

Due to discontinuance of its microprocessor chip, Figaro's microcomputer FIC93169A is to be replaced by a new version "FIC02667". In this document, usage of FIC02667 is explained in comparison to FIC93619.

FIC93619A

Part No.: M34225M2-XXXSP (Mitsubishi)

Type: 4-bit single chip microcomputer

Package: SDIP 30

Clock frequency: 2MHz

FIC02667 (new version)

Part No.: TMP47C443N (Toshiba)

Type: 4-bit single chip microcomputer

Package: SDIP 28

Clock frequency: 4.19 MHz

(Recommended oscillator: CST4.19MGW [Murata])

1. Terminals

(1) Pin assignments

FIC93619A

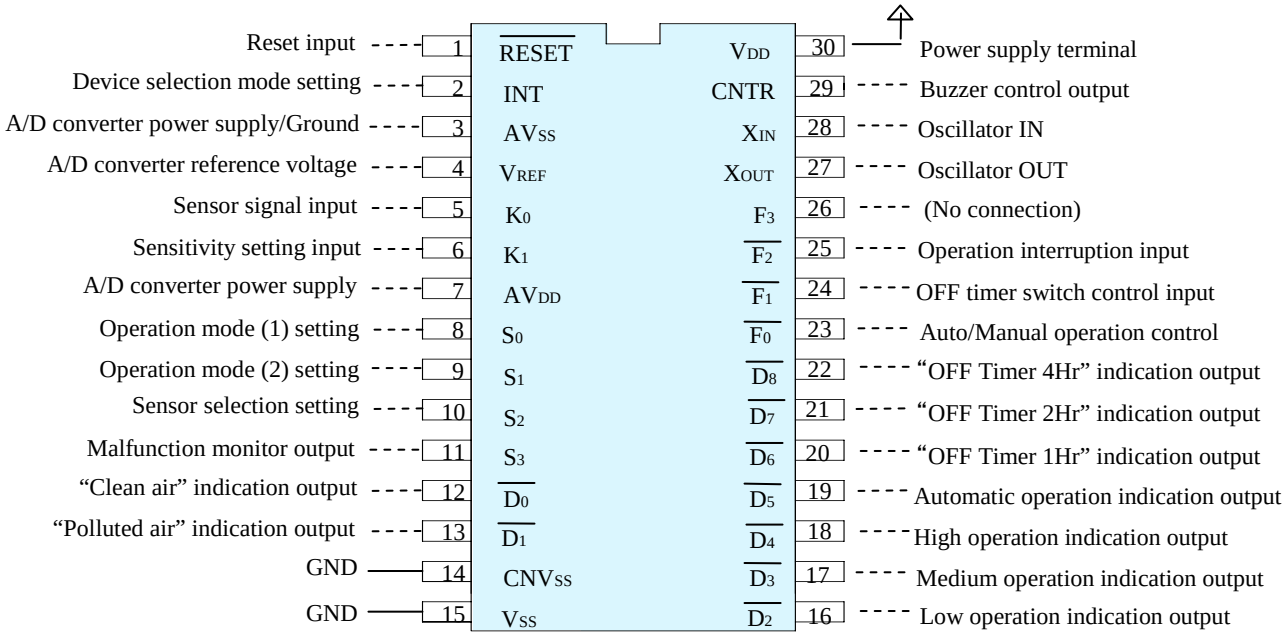

FIC02667

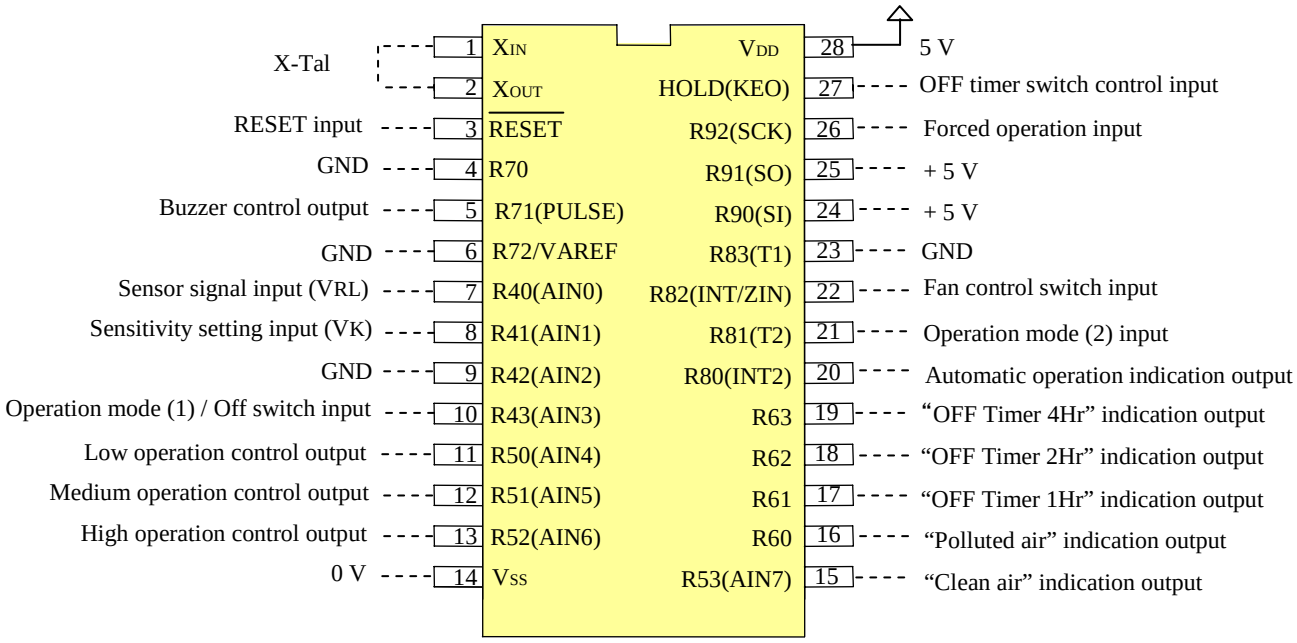

(2) Explanation of terminals

Function	Terminal	Usage and explanation	93619A		F02667	
			Symbol	Pin #	Symbol	Pin #
Power supply	Power supply	Connect 5 volt power supply	V_{DD}	30	V_{DD}	28
	GND	Connect ground	V_{SS}	15	V_{SS}	14
	CNVSS	Connect Vss (GRN)	CNV_{SS}	14	[Deleted]	
	A/D converter power supply	Connect 5 volt Power input	AV_{DD}	7	[Deleted]	
	A/D converter GND	Connect GRD GRD input	AV_{SS}	3	[Deleted]	
	A/D converter reference voltage	Connect 5 volt Reference voltage input	V_{REF}	4	[Deleted]	
Processor control	Reset input	Microcomputer reset with "L" input for more than 1 machine cycle	$\overline{RESET}$	1	$\overline{RESET}$	3
	Oscillator IN	- Connect a ceramic oscillator - Terminals for the built-in clock	X_{IN}	28	X_{IN}	1
	Oscillator OUT		X_{OUT}	27	X_{OUT}	2
Operation mode setting	Device selection mode input	Air purifier or ventilation device	INT	2	[Deleted]	
	Operation mode input (1)	Enter a combination of "H" and "L" according to location of device	S_0	8	[Deleted]	
	Operation mode input (2)		S_1	9	[Deleted]	
	Sensor selection	AMS100 or AMS800	S_2	10	[Deleted]	
	Fan control switch input	Fan speed: 2 steps-H, 3 steps-L	N/A		R82	22
	Forced operation input	Duration: Non-H, 15 min.-L	N/A		R92	26
Analog signal input	Sensor signal input	Connect the sensor signal output	K_0	5	R40	7
	Sensitivity setting input	Setting sensitivity of device based on input voltage to this port	K_1	6	R41	8

Function	Terminal	Usage and explanation	93619A		F02667	
			Symbol	Pin #	Symbol	Pin #
Operation mode display	"Clean air" indication output	"L" output in clean air, causing device not to operate	$\overline{D_0}$	12	R53	15
	"Polluted air" indication output	"L" output in polluted air, causing device to operate	$\overline{D_1}$	13	R60	16
	Low operation /indication output	Generate controlling and indicating out put ("L") for low operation	$\overline{D_2}$	16	R50	11
	Medium operation /indication output	Generate controlling and indicating out put ("L") for medium operation	$\overline{D_3}$	17	R51	12
	Low operation /indication output	Generate controlling and indicating out put ("L") for high operation	$\overline{D_4}$	18	R52	13
	Automatic operation /indication output	Generates "L" output during automatic operation	$\overline{D_5}$	19	R80	20
OFF timer display	"OFF Timer 1Hr" indication output	Generates "L" output during less than 1hr in OFF timer counter	$\overline{D_6}$	20	R61	17
	"OFF Timer 2Hr" indication output	Generates "L" output during 1 ~ 2hrs in OFF timer counter	$\overline{D_7}$	21	R62	18
	"OFF Timer 4Hr" indication output	Generates "L" output during 2 ~ 4hrs in OFF timer counter	$\overline{D_8}$	22	R63	19
Manual operation	Operation mode (1) / OFF switch input	Setting operation mode based on input voltage	(Added)		AIN0	10
	Operation mode (2) input (Tact input)	Cyclic change of [Auto-Low-(Med)-High-Auto] on a "L" pulse input	$\overline{F_0}$	23	R81	21
	OFF timer switch control input	Cyclic change of [Cont.-1hr-2hrs-4hrs-Cont.] on a "L" pulse input	$\overline{F_1}$	24	HOLD	27
	Operation abort input	Aborts all operation except for "clean or polluted air" indication	$\overline{F_2}$	25	AIN0	10
Others	Buzzer control output	Generates buzzer control output when the tactile switch is pushed	CNTR	29	$\overline{PULSE}$	5
	Malfunction monitor output	Generates periodic pulse output signals during normal operation	S_3	11	[Deleted]	

*1)

*1) Two functions in one port

2. Function change

(1) Selection of operation mode ("Tactile switch" or "Slide switch" in FIC02667)

* FIC93619A: Contains only tactile switch for selecting operation mode.
* FIC02667: Uses either a tactile switch or a slide switch for selecting operation mode.
* Both a tactile and slide switches are unable to be used simultaneously.
* For choosing the tactile switch , input +5V into "Operation mode (1) input port [10]" on startup of the microprocessor.
* "Operation mode (1) input port [10]" functions as an "OFF switch" during normal operation.

	Tactile switch input (Operation mode selection)	
FIC93619A	<Mode 1, 2> OFF ↓ Automatic ↓ Manual (High) ↓ Manual (Mid) ↓ Manual (Low) <Mode 3, 4> OFF ↓ Automatic ↓ Manual (High) ↓ Manual (Low)	

	Tactile switch input (Operation mode selection [2])	Tactile switch input (Operation mode selection [1])
FIC02667	<3 steps fan speed> OFF ↓ Automatic ↓ Manual (High) ↓ Manual (Mid) ↓ Manual (Low) <2 steps fan speed> OFF ↓ Automatic ↓ Manual (Low) ↓ Manual (High)	

Mode	Input
OFF	0～1.0V
Automatic	1.0～1.5V
Manual (High)	1.5～2.0V
Manual (Mid)	2.0～2.5V
Manual (Low)	2.5～3.0V
ON-OFF	3.0～3.5V

(2) “ Device selection mode setting ” eliminated in FIC02667

* Capability of selecting a device (an air purifier or a ventilation fan) in FIC93619A is eliminated in FIC02667.

* There is no operation mode of ‘nonuse of saturation timer’ in FIC02667.

* In the case of usage for a ventilation fan, refer to ‘3-(2) Recommended setting for usage for a ventilation fan’.

(3) “Sensor selection mode setting” eliminated in FIC02667

* FIC02667 is unable to work with AMS100 and TGS109.

FIC93619A		FIC02667	
Unit	Sensor	Unit	Sensor
AM800 (AMS2000)	TGS8XX TGS21XX TGS26XX	AMS800 AMS2000	TGS8XX TGS21XX TGS26XX
AMS100	TGS1XX		

(4) "Operation mode setting" eliminated in FIC93619A

"Fan control switch input" added in FIC02667

<Location of device in operation>

* FIC02667 is designed for a device used in a medium space (Home or Office).

* Please contact us in the case of usage in a small space such as a automobile cabin.

<Steps for fan speed control>

* Steps for fan speed control are switched by inputting H or L into "Fan control switch input".

<FIC93619A>

Mode	Fan speed	Target space	Operation mode input (1)	Operation mode input (2)
1	Low / High	Medium (Home/Office)	L	L
2		Small (Automobile cabin)	H	L
3	Low / Med / High		L	H
4		Medium (Home/Office)	H	H

<FIC02667>

Mode	Fan speed	Target space	Fan operation input
1	Low / High	Medium (Home/Office)	H
2	Low / Med / High		L

(5) "Forced operation mode" added in FIC02667

*** Newly added to FIC02667 is the "Forced operation mode", which enables to operate a fan for 15 minutes continuously after detecting pollution in air. This function is effective for application to a ventilation device, especially in the case of ventilating sudden strong odors or for avoiding chattering of fan operation.**

(6) "ON-OFF operation mode" added in FIC02667

*** An ON-OFF operation mode is introduced in FIC02677 in addition to automatic and manual operation modes. The timing chart of the ON-OFF operation mode is shown below:**

*** This mode is operable only when the slide switch in operation mode 1 is used.**

*** The fan speed during this mode is "Medium" when in 3 step mode, and set to "Low" in 2 step mode.**

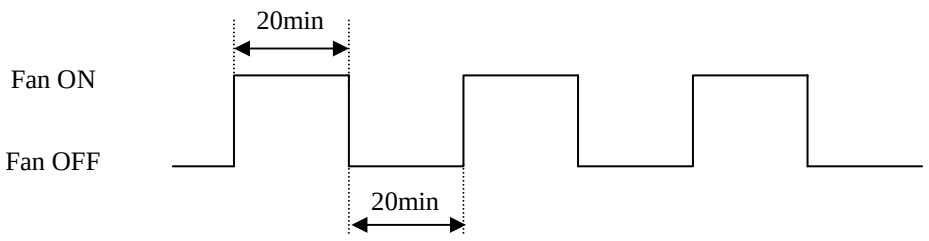

(7) "Malfunction monitor output" eliminated in FIC02667

3. Recommended mode setting for FIC02667

(1) Air purifier application

A commonly used combination for setting input conditions for an air purifier is shown in the table below.

Terminal	Pin number	Input	Setting
Operation mode (1) / OFF switch input	10(R43)	+5V	+5V (on startup of microprocessor) * OFF switch during normal operation
Operation mode (2)	21(R81)	+5V / GND	Operation mode with the tact switch
Forced operation input	26(R92)	+5V	No forced operation
Fan control switch input	22(R82)	GND	3 step fan speed

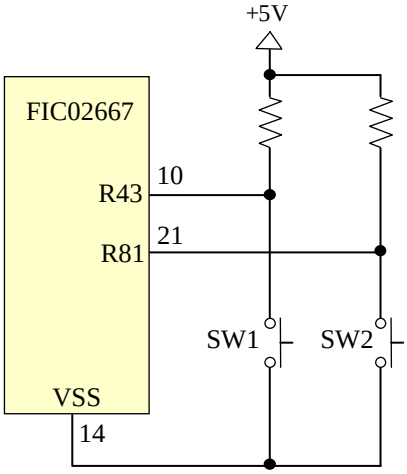

(Ex) Operation mode setting with a tact switch

(SW1: Operation change, SW2: OFF switch)

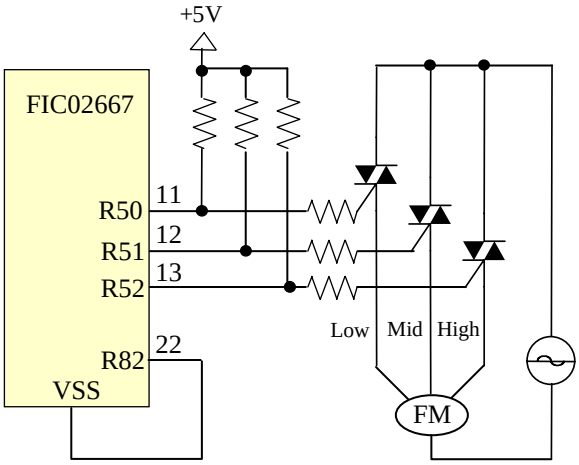

Control circuit for a fan motor

(Fan speed: 3 steps)

(2) Ventilation device application

A commonly used combination for setting input conditions for a ventilation device is shown in the table below.

Terminal	Pin number	Input	Setting
Operation mode (1) / OFF switch input	10(R43)	0 ~ 3.5V	Operation switch mode with a slide switch * According to input voltage value
Operation mode (2)	21(R81)	GND	Unused
Forced operation input	26(R92)	GND	Forced operation
Fan control switch input	22(R82)	+5V	2 steps fan speed

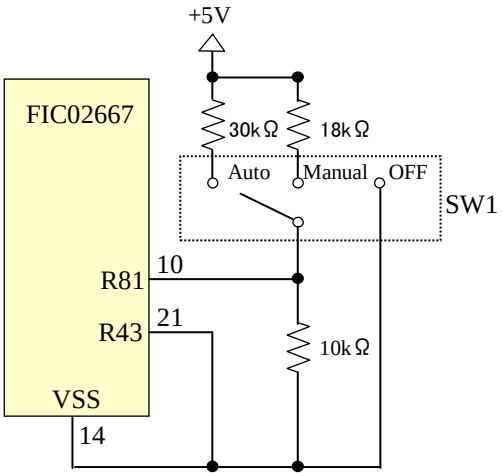

(Ex) Operation mode switch with a slide SW

(SW1: 3 ways slide switch)

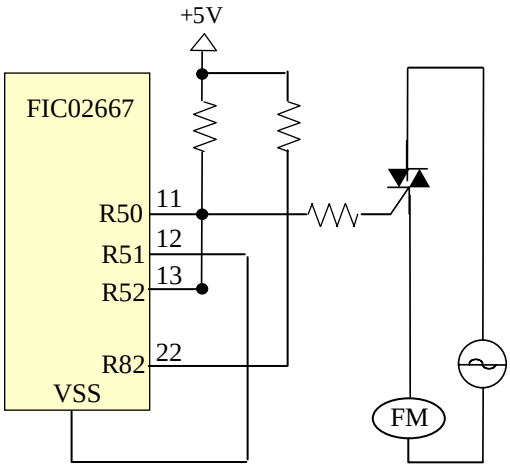

Control circuit for a fan motor

(Fan speed: 1 step)

4. A typical circuit diagram for an air purifier with FIC02667

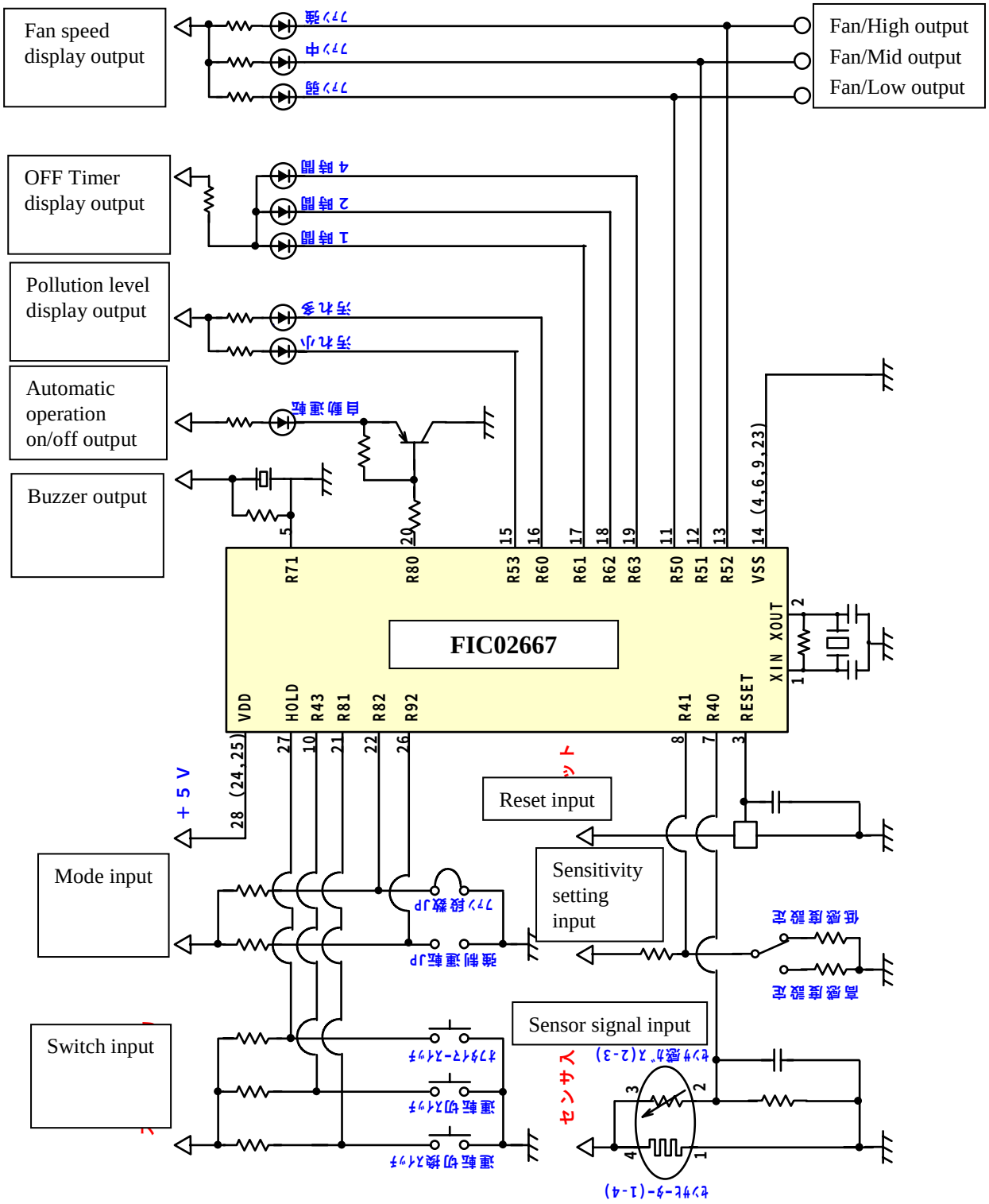

5. Electric characteristics

(1) Absolute maximum rating

Item	FIC93619				FIC02667		
	Symbol	Parameter		Rating	Symbol	Parameter	Rating
Supply voltage	V_{DD}			-0.3 ～ 7	V_{DD}		-0.3 ～ 6.5
Input voltage	V_1	X_{IN}		-0.3 ～ V_{DD} ＋ 0.3	V_{IN}		-0.3 ～ V_{DD} ＋ 0.3
		Port F,INT, CNTR,$\overline{\text{RESET}}$		-0.3 ～ 11			
		ﾎﾟｰﾄD, S		-0.3 ～ 13			
		ﾎﾟｰﾄK, V_{REF}		-0.3 ～ AV_{DD} ＋ 0.3			
Output voltage	V_0	X_{OUT}		-0.3 ～ V_{DD} ＋ 0.3	V_{OUT}		-0.3 ～ V_{DD} ＋ 0.3
		ﾎﾟｰﾄF	Output transistor OFF	-0.3 ～ 11			
		ﾎﾟｰﾄD、S		-0.3 ～ 13			
Power dissipation	Pd	Topr = 25℃		1100	Pd	DIP	300
						SOP	180
						SSOP	145
Operating temperature	Topr			-10 ～ 85	Topr		-30 ～ 70
Storage temperature	Tstg			-40 ～ 125	Tstg		-55 ～ 125

(2) Recommended operating conditions

Item	FIC93619A (Ta=-20 ～ 85℃)				F02667 (V_{SS} =0V, Topr =-30～70℃)			
	Symbol	Parameter	Min.	Max.	Symbol	Parameter	Min.	Max.
Supply voltage	V_{DD}	Standard: f(X_{IN})=400kHz～2.6MHz	4.0	6.0	V_{DD}	fc=8.0MHz	2.7	5.5
						fc=4.2MHz	2.2	
						On hold status	2.0	
Analog reference input voltage	V_{REF}	V_{DD} =4～6V	2	AV_{DD}	ΔV_{AREF}	ΔV_{AREF} - V_{SS}	2.7	—
		V_{DD} =2.5～4V	1.5					
"H" input voltage	V_{IH}	Port F	0.7V_{DD}	10	V_{IH1}	Except hysteresis input during normal operation	0.7V_{DD}	
		Port D, S		12				
		X_{IN}		V_{DD}	V_{IH2}	Hysteresis input during normal operation	0.75V_{DD}	V_{DD}
		Port k		AV_{DD}				
		INT, CNTR, S_{IN}, CLK	0.8V_{DD}	10	V_{IH3}	On hold status	0.9V_{DD}	
		$\overline{RESET}$	0.85V_{DD}	10				
"L" input voltage	V_{IL}	INT, CNTR, S_{IN}, CLK	0	0.2V_{DD}	V_{IL1}	Except hysteresis input during normal operation	0	0.3V_{DD}
		Port D, F K, ,X, X_{IN}		0.3V_{DD}	V_{IL2}	Hysteresis input during normal operation		0.25V_{DD}
		$\overline{RESET}$		0.15V_{DD}	V_{IL3}	On hold status		0.1V_{DD}
"L" output current	I_{OL}	Port D, S	12mA(Ave.)		I_{OUT1}	R5, R6 Port	30mA	
					I_{OUT2}	R4, R7, R8, R9 Port	3.2mA	
		Port CNTR	5mA(Ave.)		ΣI_{OUT1}	R5, R6 Port	120mA	

(3) Performance of A/D conversion

Item	FIC93619A (V_{SS}= AV_{SS} = 5V, Ta=-10 ～ 85℃,f(X_{IN})=2MHz)				FIC02667 (Topr =-30～70℃)			
	Symbol	Parameter	Min.	Max.	Symbol	Parameter	Min.	Max.
Absolute accuracy		V_{DD} = AV_{DD} = V_{REF} =5.12V	—	±3LSB		V_{DD} =2.7～5.5V ΔV_{AREF} = V_{DD} ±0.001V V_{SS} =0.000V	—	±2LSB

6. Configuration

FIC93619A	FIC02667